NOAA Technical Report NMFS 120 June 1994

Abundance and Distribution of Ichthyoplankton along an Inshore-Offshore Transect in Onslow Bay, North Carolina

Allyn B. Powell
Roger E. Robbins

U.S. Department of Commerce

NOAA Technical Report NMFS 120
A Technical Report of the *Fishery Bulletin*

Abundance and Distribution of Ichthyoplankton along an Inshore-Offshore Transect in Onslow Bay, North Carolina

Allyn B. Powell
Roger E. Robbins

June 1994

U.S. Department of Commerce
Seattle, Washington

Abundance And Distribution Of Ichthyoplankton along an Inshore-Offshore Transect In Onslow Bay, North Carolina

ALLYN B. POWELL and ROGER E. ROBBINS

National Marine Fisheries Service,
Southeast Fisheries Science Center, NOAA/NMFS
Beaufort Laboratory
Beaufort, North Carolina 28516

ABSTRACT

The distribution and abundance of ichthyoplankton was investigated from November 1979 to March 1980 along a transect from coastal to continental slope waters in Onslow Bay, North Carolina. Representatives of 66 families were collected; 24 of which were tropical families, a category that also includes families of typically oceanic and deep-sea fishes. Larvae of tropical species were collected in coastal and shelf waters, demonstrating the intrusion of Gulf Stream waters onto the continental shelf. From December through March, frontal waters that separated cold open-shelf surface waters from warm Gulf Stream surface waters were observed. Higher abundances of fish larvae were sometimes, but not consistently, associated with frontal waters. A great diversity of taxa was collected in offshore waters, and densities of larvae were low in coastal waters; low densities were attributed to gear selectivity rather than low larval abundance. Larvae of commercially and recreationally important estuarine-dependent species, especially *Leiostomus xanthurus* and *Micropogonias undulatus*, were dominant components of the ichthyoplankton. Representatives of the families Bothidae, Clupeidae, Gadidae, Gonostomatidae, Myctophidae, Ophidiidae, and Sparidae were also important components of the ichthyoplankton. Larvae of species representing two strikingly different life history types—mesopelagic and estuarine-dependent—frequently cooccurred.

Introduction

Recently in April 1990 the National Marine Fisheries Service (NMFS), Beaufort Laboratory, initiated a reef fish recruitment study emphasizing recruitment on hard bottoms in Onslow Bay, North Carolina. One objective of that study was to examine historical samples for the presence of reef fishes, particularly gag, *Mycteroperca microlepis*, and red porgy, *Pagrus pagrus*, that appear to spawn during winter months (Manooch, 1976; Collins et al., 1987). In addition, the National Oceanic and Atmospheric Administration (NOAA) Coastal Ocean Program (COP) recently (1991) initiated a South Atlantic Bight Recruitment Experiment (SABRE) study centered in Onslow Bay, North Carolina. The SABRE study focuses on recruitment processes for estuarine-dependent fishes spawned in fall and winter.

The objective of our study was to measure the abundance of all ichthyoplankton taxa taken along an inshore to offshore transect in Onslow Bay, North Carolina, from late fall 1979 through early spring 1980. This information was used (1) to determine the kinds and abundance of reef fish larvae, (2) to provide basic information for projects like SABRE on the composition and abundance of fish larvae relative to distance from shore in Onslow Bay, North Carolina, from late fall to early spring, and (3) to examine the composition and abundance of ichthyoplankton in relation to a thermal front that separates warm Gulf Stream waters from cooler continental shelf waters. A detailed account of the age and size, relative to distance from shore, of *Micropogonias undulatus*, *Leiostomus xanthurus*, and *Brevoortia tyrannus* collected during this study has been given by Warlen (1982), Warlen and Chester (1985), and Warlen (1992), respectively.

Methods

The RV *John deWolf II*, a 19-m steel long-liner converted for oceanographic work, was used on all cruises. One transect, consisting of eight stations (11–18) from inshore to offshore (Fig. 1), was sampled monthly from November 1979 to March 1980. Ichthyoplankton was sampled with a 60-cm bongo sampler with 505-µm nets except in February, when 333-µm mesh nets were used. A flowmeter mounted in the center of each net mouth was used to estimate the volume of water filtered. Except for the shallow stations 11 and 12, nets were towed obliquely using standard California Cooperative Oceanic Fisheries Investigations (CALCOFI) techniques (Smith and Richardson, 1977). At the shallow stations 11 and 12, nets were towed 1 m below the surface for approximately 5 minutes.

Larvae from one net were preserved in 5% buffered formalin; larvae from the other, in 70% ethyl alcohol. Catches were standardized to number of larvae/100 m^3. Catches from duplicate tows, when taken, were averaged arithmetically. Surface temperature was recorded at each station. Isotherms depicted in Figure 2 were interpolated from station data.

Taxa were classified by range and habitat of adults, to allow comparisons between the following habitat groups:

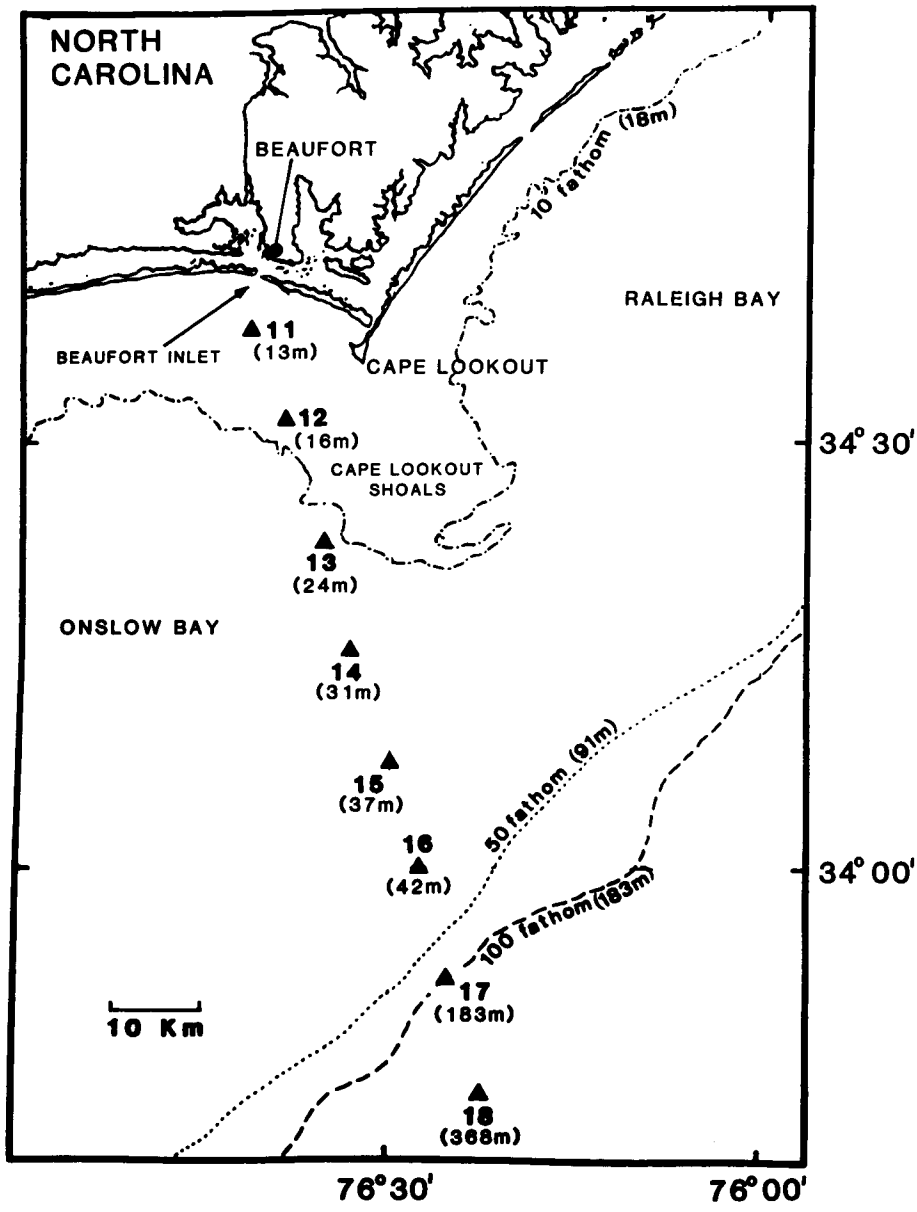

Figure 1
Location of sampling sites in Onslow Bay, North Carolina. Values in parentheses indicate depth (m).

(1) estuarine dependent—species that spawn in coastal and shelf waters but that generally reside in estuaries during their juvenile stage; (2) coastal—species that commonly inhabit depths down to 18 m; (3) open shelf—species that commonly inhabit depths of 18–65 m; (4) shelf edge—species that commonly inhabit depths of 65–132 m; (5) lower shelf—species that commonly inhabit depths of 132–185 m; and (6) "tropical"—subtropical and tropical species, as well as oceanic, mesopelagic, and deep-sea species, whose occurrence on North Carolina's continental shelf was most likely caused by transport by Gulf Stream intrusions. For convenience, species of this latter group will be referred to as "tropical" species. A list of 685 species inhabiting North Carolina marine waters is given by Schwartz (1989). Schwartz's classification, general distributional information from Robins and Ray (1986), and specific distributional information on carapids from Olney and Markle (1979) and on stromateoids from Ahlstrom et al. (1976) were used to classify taxa.

Stations were classified by four general habitat types following Struhsaker's (1969) classification: (1) coastal habitat, stations 11 and 12; (2) open-shelf habitat, stations 13–16; (3) lower-shelf habitat, station 17; and (4) slope habitat, station 18. Because open-shelf habitat covers a wide area, we considered stations close to coastal habitat as inner open-shelf (e.g. 13 and 14) and stations close to lower-shelf habitat as outer open-shelf (e.g. 15 and 16). Supplemental habitat descriptions were included from Schwartz (1989) and Robins and Ray (1986).

When evaluating the contribution of individual taxa in terms of density, we used five larvae/100 m^3 (i.e. ≥

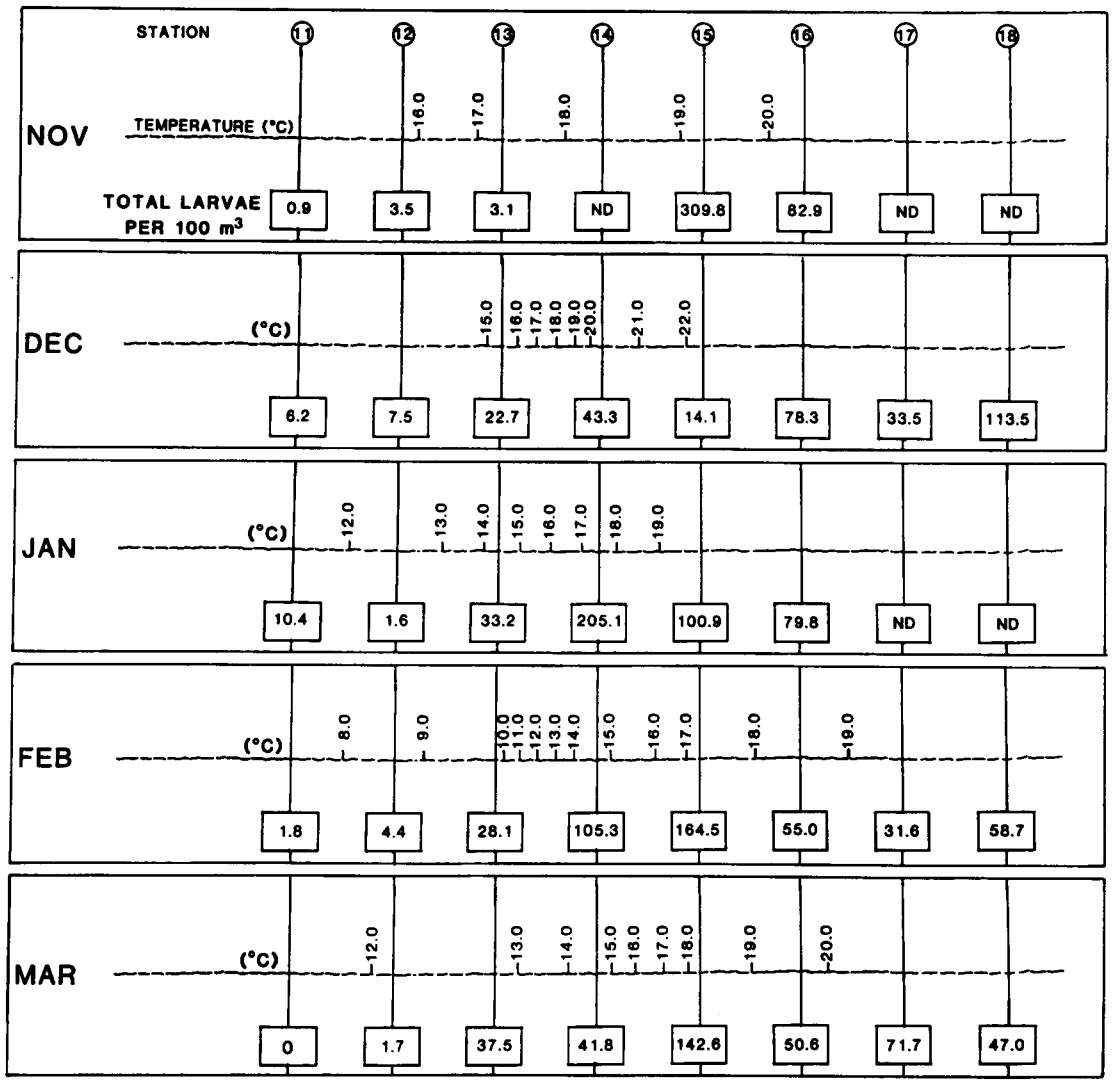

Figure 2

Total larvae (number/100 m^3) and sea surface temperatures during November–March along a transect from coastal to Gulf Stream waters in Onslow Bay, North Carolina. ND = no data collected.

4.5 larvae/100 m^3) as the criterion to separate abundant from less abundant. Identifying larvae to species level resulted in the tentative identification of certain taxa. For example, six species of the gadid genus *Urophycis* reportedly occur in North Carolina waters (Schwartz, 1989; Comyns and Grant, 1993). Pigmentation patterns of three of these (*U. regia, U. chuss,* and *U. chesteri*) have been described (Fahay 1983; Methven, 1985), but small specimens (<10 mm SL) of *U. chesteri* and *U. chuss,* which may occur in our study area, cannot be separated. We identified, when possible, two types of *Urophycis, U. regia* and *U. floridiana,* on the basis of the absence (*U. regia)* or presence (*U. floridiana*) of pelvic-fin pigment (Comyns and Grant, 1993); however, other *Urophycis* spp. that resemble them may also have been caught. A similar case occurred for the families Myctophidae and Bothidae. Identifications of myctophids were based on criteria following Fahay (1983). For the Bothidae, not all species of the genera *Etropus* and *Citharichthys* have been described in detail (i.e. *E. rimosus* and *C. macrops*) (Tucker, 1982) so species identification of larvae of these genera should be considered tentative. Unidentified *Paralichthys* are most likely *P. lethostigma* or *P. albigutta* because larvae of these two species cannot be separated from one another until meristic characters (e.g. anal-fin rays) are developed, whereas *P. dentatus* can be readily separated. A complete list of larval abundance by cruise and station is given in Appendix Tables 1–5. Larval material is deposited at the Beaufort Laboratory under the care of the senior author.

Results

Total Abundance

Representatives of 66 families, including representatives of 24 "tropical" families, were collected (Appendix Tables 1–5). The greatest abundance of fish larvae during late fall to early spring appeared at open-shelf (stations 14–16), lower-shelf (station 17), and slope (station 18) locations (Fig. 2). Although there was a considerable degree of variability, larvae over the entire study period were most abundant at open shelf stations 14 and 15 and were least abundant at coastal stations 11 and 12.

A thermal front, as defined by the greatest difference in surface water temperatures that separated cool coastal waters from warm Gulf Stream waters, was usually present on the shelf during sampling. Frontal waters were generally, but not consistently, associated with high larval densities (Fig. 2). During November sampling, a thermal front was not observed. During December, larval fish abundances associated with the front (stations 13–15) were lower than the mean values calculated for these stations over the entire study period, whereas the highest value occurred in warmer Gulf Stream waters over the continental slope (Fig. 2). During January, abundances were high in the vicinity of the front (stations 13–15), but lack of samples at offshore stations would not allow proper evaluation of larval fish abundance relative to frontal waters (Fig. 2). During February, high abundances were associated with frontal waters (stations 14–15), but values at the shoreward side of the front did not appear unusually high (Fig. 2). Similarly in March, high abundances were observed at the ocean side of the front, but low abundances were observed at the shoreward edge (Fig. 2). However, in general, areas that had the overall highest densities of fish larvae were associated with the thermal front.

Diversity of Families

There was a greater diversity of families at offshore stations (14–18) than onshore stations (11–13) (Table 1). Collections in coastal waters (stations 11–12), where densities of fish larvae were low (Fig. 2), contained a consistently low diversity of families (Table 1). On the other hand, collections at the lower-shelf and slope habitats contained a high diversity of families, but very few families were abundant (Table 1). For example, at station 17 during December, 35 families were identified, but none were collected at densities ≥ five larvae/100 m^3.

Distribution and Relative Abundance of Selected Taxa

The families Bothidae, Clupeidae, Gadidae, Gonostomatidae, Myctophidae, Ophidiidae, Sciaenidae, and Sparidae were important components of the ichthyoplankton in Onslow Bay, North Carolina, given they were among the five most abundant families (with ≥ 10 larvae/100 m^3) in at least one cruise (Table 2).

Sciaenidae—Only two species of sciaenids (*Leiostomus xanthurus* and *Micropogonias undulatus*) were collected and they dominated collections during late fall and winter (Table 1). These larval sciaenids were most abundant at open-shelf habitat stations and least abundant at coastal habitat stations (Table 1). On one occasion (December), a large number of larvae of these species were collected in slope habitat waters well inside the Gulf Stream (Table 1, Fig. 2). *Micropogonias undulatus,* which intensively spawns in the study area from late September through November (Warlen, 1982), was the most abundant estuarine-dependent species during

Table 1

The most abundant families collected in Onslow Bay, North Carolina, by month and station. Values are numbers/ 100m^3. Blank spaces indicate that larvae occurred at densities < 4.5/100 m^3. Dashes indicate no samples were taken.

	Station							
Family	11	12	13	14	15	16	17	18
November								
Bothidae					11.5			
Clupeidae					6.3			
Sciaenidae					273.1	60.2		
Triglidae						8.1		
Total number of families	1	2	1	—	13	10	—	—
December								
Bothidae		5.4	17.5			5.8		4.8
Carangidae						6.6		5.1
Centriscidae						7.0		
Engraulidae	4.7							
Gadidae				27.1				
Gonostomatidae						11.2		
Myctophidae					7.0	11.0		
Ophidiidae				6.1				
Sciaenidae			10.2	4.6		8.4		51.4
Triglidae				8.0				
Total number of families	3	4	3	9	3	18	35	23
January								
Bothidae				24.8	15.3	7.3		
Clupeidae			22.2	14.6	5.2	9.6		
Gadidae			9.8	18.8	15.4	6.0		
Ophichthidae				5.4				
Photichthyidae						4.9		
Sciaenidae				139.8	15.5	4.8		
Sparidae				7.7	78.1	8.7		
Total number of families	7	1	4	11	17	15	—	—
February								
Bothidae				30.1	42.3	19.0		
Carangidae					4.5			
Clupeidae			8.4	8.2	37.8			13.4
Gadidae			5.0	10.4	27.6	22.1	6.5	6.2
Gobiidae					4.7			
Myctophidae			6.8	8.9				
Ophidiidae				4.7	11.5			
Sciaenidae			13.5	45.2	23.0			
Scorpaenidae						6.7		6.4
Serranidae				4.5				
Sparidae					21.8			
Synodontidae				5.1				
Triglidae					5.1			
Total number of families	1	6	11	25	30	19	19	27

Table 1 (Continued)

Family	Station 11	12	13	14	15	16	17	18
				March				
Bothidae			10.5	10.1	18.9	9.6		
Clupeidae			19.3		22.3	22.7	27.5	13.0
Cynoglossidae				21.8				
Gadidae			5.5	4.8	47.8	6.3		
Myctophidae				5.7			8.6	
Ophidiidae			5.4		30.5			
Sciaenidae				14.3	15.3			
Serranidae			5.0		11.4	5.5		
Sparidae					8.8			
Stromateidae					5.9			
Synodontidae				8.0				
Total number of families	0	2	11	10	19	21	18	15

Table 2
Total abundances (numbers/100 m^3 summed over all stations) of the most abundant families collected in Onslow Bay, North Carolina, from November 1979 through March 1980. Blank spaces indicate that larvae occurred at densities < 4.5 larvae/100 m^3.

Family	Month Nov	Dec	Jan	Feb	Mar
Ariommatidae		4.7			
Balistidae		5.7			
Bothidae	3.2	37.8	48.0	101.2	54.9
Callionymidae		4.6			
Carangidae		13.5		5.1	9.8
Centriscidae		7.4			
Clupeidae	7.2	6.6	56.0	75.2	100.7
Cynoglossidae				6.0	26.8
Engraulidae	5.9	6.3		4.8	
Gadidae		28.0	50.0	79.3	64.4
Gobiidae			7.0	8.3	8.3
Gonostomatidae		16.5		11.9	
Myctophidae		24.8	4.9	30.8	23.2
Ophichthidae		5.7	9.1	5.9	
Ophidiidae		10.3		17.1	39.9
Photichthyidae			5.9		
Scaridae		5.2			
Sciaenidae	334.1	81.5	165.3	88.7	34.7
Scombridae					5.8
Scorpaenidae				20.6	
Serranidae		5.0		13.6	23.4
Sparidae			97.5	29.1	12.6
Stromateidae					9.4
Syngnathidae					4.8
Synodontidae				10.6	15.8
Triglidae	8.1	8.0		8.8	

November; from December through February, *L. xanthurus* was the dominant estuarine-dependent species (Table 3).

Bothidae—Bothids were abundant throughout the study period (Table 2). They were most abundant in open-shelf waters and rarely were collected in coastal, lower-shelf, and slope habitat waters (Table 1). The most commonly collected bothids were of the genera *Etropus*, *Citharichthys*, and *Paralichthys* (Table 4). Of the genus *Paralichthys*, three estuarine-dependent species were most abundant: *P. albigutta*, *P. dentatus*, and *P. lethostigma*; *P. squamilentus* was rarely collected (Table 4). *Paralichthys* larvae were most abundant in open-shelf waters but were not collected in November. *Paralichthys albigutta* and *P. lethostigma* were first collected in December. During February, all three species were abundant in open-shelf waters that were on the Gulf Stream edge of the thermal front (Table 4, Fig. 2). *Paralichthys* sp. (either *P. albigutta* or *P. lethostigma*) ranked third in abundance in December and fourth in abundance from January through March among *Paralichthys* collections (Table 4). Given their importance and their small size (meristic characters necessary to separate them have not yet developed), a comparative description of *P. lethostigma* and *P. albigutta* is needed to evaluate the abundance and distribution of early life history stages and spawning areas of each of these bothids.

Etropus crossotus and *E. microstomus* were most abundant in open-shelf, lower-shelf, and slope habitat waters (Table 4) suggesting that the spawning area of these estuarine, coastal, and open-shelf species might be offshore of their adult habitat. Other bothids were less abundant. *Bothus* sp., representative of two species that occur in the study area (*B. ocellatus* and *B. robinsi*), was never abundant. This genus, adults of which occupy

Table 3

Relative abundance (numbers/100 m^3) of estuarine-dependent species, by month and station, collected in Onslow Bay, North Carolina. Dashes indicate no samples were taken. Blank spaces indicate no larvae were collected.

		Station							
Family	Taxon	11	12	13	14	15	16	17	18
				November					
Clupeidae	*Brevoortia tyrannus*		0.9		—	6.3		—	—
Sciaenidae	*Leiostomus xanthurus*				—	43.2	3.2	—	—
	Micropogonias undulatus				—	229.8	56.9	—	—
				December					
Bothidae	*Paralichthys albigutta*		2.5						
	P. lethostigma			5.6					
	Paralichthys sp.			7.0					
Clupeidae	*Brevoortia tyrannus*				4.1				0.6
Sciaenidae	*Leiostomus xanthurus*			5.6	4.6		7.0	1.1	45.4
	Micropogonias undulatus	1.9	1.8	4.6		1.8	1.4	0.5	6.0
				January					
Bothidae	*Paralichthys dentatus*				6.5	2.0		—	—
	Paralichthys sp.				7.1	1.5		—	—
Clupeidae	*Brevoortia tyrannus*	2.8	1.6	22.3	14.4	2.0	1.0	—	—
Sciaenidae	*Leiostomus xanthurus*	4.2		0.9	137.2	10.8	3.9	—	—
	Micropogonias undulatus				2.7	4.7	1.0	—	—
Sparidae	*Lagodon rhomboides*	0.7		2.2	3.5	14.9	8.7	—	—
				February					
Bothidae	*Paralichthys albigutta*			1.6	4.1	5.6			
	P. dentatus				1.6	6.3	2.7	0.3	
	P. lethostigma				1.8	5.0			
	Paralichthys sp.				4.2	6.2	1.7	0.3	
Clupeidae	*Brevoortia tyrannus*			8.4		15.9	1.1	0.3	3.2
Sciaenidae	*Leiostomus xanthurus*		0.8	13.5	41.7	20.3	2.3	0.3	1.8
	Micropogonias undulatus				3.5	2.7	1.1	0.3	0.3
Sparidae	*Lagodon rhomboides*	0.8	1.4	1.6	2.7	21.8			
				March					
Bothidae	*Paralichthys dentatus*					3.7			
	Paralichthys sp.		0.8	7.9	2.9				
Clupeidae	*Brevoortia tyrannus*		1.0	19.3	2.9	10.7	4.4	6.9	2.8
Sciaenidae	*Leiostomus xanthurus*			2.3	11.4	13.5	0.9	2.0	
	Micropogonias undulatus				2.9	1.7			
Sparidae	*Lagodon rhomboides*			3.9		8.8			

Table 4

Relative abundance (numbers/100 m^3) of bothid larvae, by month and station, collected in Onslow Bay, North Carolina. Dashes indicate no samples were taken. Blank spaces indicate no larvae were collected.

	Station							
Taxon	11	12	13	14	15	16	17	18
November								
Bothus sp.				—	1.3		—	—
Citharichthys sp.				—	2.2		—	—
Etropus sp.				—		1.6	—	—
Unidentified				—	8.1		—	—
December								
Bothus sp.				2.0		1.6	0.6	1.6
Cyclopsetta fimbriata							0.6	0.3
Etropus microstomus								0.6
Etropus sp.						2.8		2.2
Paralichthys albigutta		2.5						
P. lethostigma			5.6					
Paralichthys sp.			7.0					
Scophthalmus aquosus	1.0	2.9	4.9					
Unidentified						1.4		
January								
Citharichthys gymnorhinus				4.2				
Citharichthys sp.				4.9	4.5	1.4		
Etropus sp.					7.2	5.8		
Paralichthys dentatus				6.5	2.0			
Paralichthys sp.				7.1	1.5			
Unidentified	0.7			2.1				
February								
Bothus sp.			1.6			1.4	0.3	0.8
Citharichthys cornutus							0.3	
C. gymnorhinus							0.3	0.8
Citharichthys sp.							0.3	
Cyclopsetta fimbriata								0.3
Etropus crossotus					5.8			
E. microstomus				7.6	3.4	2.6	0.5	
Etropus sp.				6.8	7.0		0.9	0.4
Paralichthys albigutta			1.6	4.1	5.6			
P. dentatus				1.6	6.3	2.7	0.3	
P. lethostigma				1.8	5.0			
Paralichthys sp.				4.2	6.2	1.7	0.3	
Unidentified				4.1	3.2	10.5		1.2
March								
Bothus sp.						1.7	1.0	1.1
Citharichthys sp.							0.4	
Cyclopsetta fimbriata						1.4		
Etropus microstomus					14.2			1.1
Etropus sp.			2.6	7.2		4.1	1.0	
Paralichthys dentatus					3.7			
P. squamilentus					1.0	1.1		
Paralichthys sp.		0.9	7.9	2.9				
Unidentified						1.3		0.4

open-shelf waters, was most frequently collected in outer open-shelf, lower-shelf, and slope habitat waters (Table 4). *Citharichthys gymnorhinus* and *C. cornutus*, which are not known to occur in Onslow Bay as adults (Tucker, 1982), were rare in our collections (Table 4). The largest collection of *C. gymnorhinus* was taken during January in inner open-shelf waters on the shoreward edge of the thermal front (Table 4, Fig. 2). *Scophthalmus aquosus*, a coastal and open-shelf species, was collected only in December in coastal and inner portions of open-shelf waters. *Cyclopsetta fimbriata*, a species that occurs in open-shelf and lower-shelf waters, was not commonly encountered. Larvae were only collected in outer open-shelf, lower-shelf, and slope waters within the Gulf Stream (Table 4).

Clupeidae—Clupeid larvae were abundant throughout the study period, especially during March (Table 2). They were more commonly collected in coastal and open-shelf waters, and less commonly collected in lower-shelf and slope habitat waters (Table 1). Two species dominated the collection, the estuarine-dependent *Brevoortia tyrannus* and the pelagic *Etrumeus teres*, adults of which inhabit coastal and open-shelf waters. Although it was most abundant in open-shelf waters, *B. tyrannus* occurred throughout the study period and in all habitats (Table 5). Larvae were a major component of the estuarine-dependent ichthyoplankton in January and February and dominated in March (Table 3). *Etrumeus teres* was first collected in January in small numbers in lower-shelf and slope habitat waters and was only collected on the Gulf Stream side of the thermal front (Table 5). When collected together, *E. teres* always occurred in greater densities than *B. tyrannus*.

Gadidae—Gadid larvae were abundant in the ichthyoplankton in December through March (Table 2). Gadid larvae were not collected in November and were never abundant in coastal waters (Tables 1 and 2). *Urophycis regia* was the most common gadid, and it occurred mainly in open-shelf waters (Table 6). *Urophycis floridiana* had a similar distribution although it occurred more often in middle to outer open-shelf waters. The least common gadid *Enchelyopus cimbrius* was collected only during February and March and mainly in open-shelf waters. Unidentified *Urophycis* occurred only at offshore stations.

Mesopelagic Larvae—The mesopelagic Myctophidae, Gonostomatidae, and Photichthyidae were the most commonly encountered "tropical" families. These families were most abundant in open-shelf waters rather than in slope habitat waters (Table 1). During December these families were commonly collected in Gulf Stream waters (Table 1) and were never collected within or at the inshore edge of the thermal front (Fig. 2). In February myctophids were collected close to shore within the front, where temperatures ranged from 10° to 15°C (Table 1, Fig. 2). Smaller numbers of larval myctophids, gonostomatids, and photichthyids were collected in coastal waters at this time when temperatures were 8°–9°C (Fig. 2). During March, myctophids were most abundant in open-shelf and lower-shelf waters on the shore side and Gulf Stream side of the front, respectively (Table 1, Fig. 2). The inshore occurrence of these mesopelagic families indicated a distributional pattern that is influenced by Gulf Stream intrusions onto the open shelf.

Table 5

Relative abundance (numbers/100 m^3) of larval Atlantic menhaden, *Brevoortia tyrannus* (AM), and larval round herring, *Etrumeus teres* (RH), in Onslow Bay, North Carolina, by station and month. Dashes indicate no samples were taken.

	Station							
	11	12	13	14	15	16	17	18
Month	AM/RH	AM/RH	AM/RH	AM/RH	AM/RH	AM/RH	AM/RH	AM/RH
November	0/0	0.9/0	0/0	—	6.3/0	0/0	—	—
December	0/0	0/0	0/0	4.1/0	0/0	0/0	0/0.3	0.6/1.6
January	2.8/0	1.6/0	22.3/0	14.4/0	2.0/3.2	1.0/8.7	—	—
February	0/0	0/0	8.4/0	8.2	15.9/21.8	1.1/2.2	0.3/3.8	3.2/10.2
March	0/0	1.0/0	19.3/0	2.9/0	10.7/0	4.4/18.2	6.9/20.6	2.8/10.2

Table 6

Relative abundance (numbers/100 m^3) of gadid larvae in Onslow Bay, North Carolina, by station and month. Dashes indicate no samples were taken. No gadid larvae were collected in November. Blank spaces indicate no larvae were collected.

	Station							
Taxon	11	12	13	14	15	16	17	18
				December				
Urophycis regia				4.6				
Urophycis sp.							0.3	0.6
Unidentified				22.4				
				January				
U. floridiana				1.6			—	—
U. regia			9.8	17.1	15.4	6.0	—	—
				February				
Enchelyopus cimbrius			1.6	1.6	1.7			0.3
U. floridiana		0.8		4.6	9.7	8.0		
U. regia		0.8	3.4	4.2	16.3	2.8		
Urophycis sp.						11.3	6.5	5.9
				March				
E. cimbrius			2.6	1.1				
U. floridiana					12.2	1.8		
U. regia			2.9	3.8	35.6	4.5		

Ophidiidae—Ophidiid larvae were frequently captured, but were not generally found at densities ≥ five larvae/100 m^3 throughout the study period (Table 2). Ophidiid larvae were most abundant in open-shelf waters (Table 1). In December, when ophidiids ranked seventh in abundance (Table 2), we were unable to identify them below the family level. In February, ophidiids collected in open-shelf waters (stations 14 and 15) were identified as *Ophidion grayi* (8.0 larvae/100 m^3), a coastal and open-shelf species, and *Lepophidium profundorum* (2.4 larvae/100 m^3), a shelf-edge and lower-shelf species. In March, when they were more abundant (Table 2), ophidiids were collected in open-shelf waters (Table 1). Here, collections were dominated by *O. grayi* (11.9 larvae/100 m^3), *O. selenops* (6.3 larvae/100 m^3), and *L. profundorum* (4.7 larvae/100 m^3).

Sparidae—Sparid larvae were abundant from January through March in open-shelf waters (Tables 1 and 2). Numerous unidentified sparids were collected at one station (January, station 15, 63.3 larvae/100 m^3), but at all other stations the estuarine-dependent *Lagodon rhomboides* was the only abundant sparid (Tables 1 and 2). *Lagodon rhomboides* was the third most abundant estuarine-dependent species in each of the months it was collected (Table 3).

Reef fishes—Reef fish larvae generally were not abundant in the ichthyoplankton collected in Onslow Bay from late fall to early spring (Table 7). However, serranid and scarid larvae were abundant during certain months (Table 2). Scarids, found in abundance only in December (Table 2), were never abundant at any single station (Table 1) but were collected in outer open-shelf, lower-shelf, and slope habitat waters (Table 7). Serranids, whose larvae were the most frequently collected of the reef fishes, were most abundant during February and March in open-shelf waters (Tables 1 and 2). Species of *Diplectrum* were the most common serranids in our collections. *Mycteroperca*, which was of major interest to the objectives of this study, was collected only in March (Table 7). Only one larva of *Pagrus pagrus*, the other reef fish of major interest, was collected.

Cooccurrence of "tropical" and estuarine-dependent species

An interesting distributional pattern observed was the cooccurrence of "tropical" and estuarine-dependent species (Table 8). In November, "tropical" species were rarely collected. In December, "tropical" and estuarine-

Table 7

Relative abundance (number/100 m^3) of reef fish larvae in Onslow Bay, North Carolina, by station and month. Dashes indicate no samples were taken. Blank spaces indicate no larvae were collected.

		Station					
Family	Taxon	13	14	15	16	17	18
			November				
Labridae	*Hemipteronotus* sp.		—		1.6	—	—
Pomacentridae	*Abudefduf taurus*		—		1.6	—	—
Scaridae	Unidentified		—		1.6	—	—
Serranidae	Serraninae		—	3.2		—	—
			December				
Acanthuridae	*Acanthurus* sp.				1.9	1.5	
Apogonidae	Unknown					0.3	
Congridae	*Ariosoma* sp.					0.5	
Holocentridae	Unidentified						0.3
Muraenidae	Unidentified					0.3	
Scaridae	Unidentified				2.8	0.8	1.6
Serranidae	*Anthias* sp.				1.4	0.3	0.3
	Anthiinae					0.3	
	Epinephelini				1.4		
	Serraninae					0.6	0.6
			January				
Serranidae	*Diplectrum* sp.				1.0	—	—
			February				
Chaetodontidae	*Chaetodon* sp.			1.0			
Labridae	*Hemipteronotus* sp.			1.6	1.4	1.4	
Malacanthidae	*Lopholatilus chamaeleonticeps*			1.0			
Scaridae	Unidentified						0.3
Serranidae	*Anthias* sp.			1.5	1.0	1.1	
	Anthiinae						0.3
	Centropristis sp.		1.6				
	Diplectrum formosum	1.5					
	Diplectrum sp.		1.5	2.1	1.1		
	Serraninae						0.6
	Unidentified				1.4		
Sparidae	*Pagrus pagrus*		1.6				
			March				
Holocentridae	*Holocentrus* sp.				1.7		
Kyphosidae	*Kyphosus sectatrix*					1.0	
Mullidae	*Mullus auratus*			1.1			
Scaridae	Unidentified						1.1
Serranidae	*Anthias* sp.			2.2	1.8		0.4
	Centropristis sp.			2.0	1.9	0.4	
	Diplectrum sp.	5.0		4.7			0.7
	Epinephelini				2.0		
	Mycteroperca sp.			2.4			

dependent species cooccurred on outer open-shelf, lower-shelf, and slope habitats, in waters warmed by Gulf Stream intrusions (Table 8, Fig. 2). In slope habitat waters, where "tropical" ichthyoplankton would be expected to dominate, the estuarine-dependent *Leiostomus xanthurus* dominated (Table 8). The fate of these estuarine-dependent larvae in the northeastward flowing, zooplankton-poor (Paffenhofer, 1985) Gulf Stream is unknown.

"Tropical" and estuarine-dependent species cooccurred in all habitats in February (Table 8). These groups were collected together in coastal, open-shelf, lower-shelf, and slope habitat waters, as well as in waters shoreward of the thermal front, in the front, and on the

Table 8
Relative abundance (numbers/100 m^3) of larvae of "tropical"/estuarine-dependent species (see definitions in Methods), by station and month, collected in Onslow Bay, North Carolina. Dashes indicate no samples were taken.

	Station							
Month	11	12	13	14	15	16	17	18
November	0/0	0/0.9	0/0	—	1.3/279.3	0/60.1	—	—
December	0/1.9	0/4.3	0/22.7	0/8.7	7.0/1.8	36.4/8.4	11.4/1.5	5.4/52.0
January	0/7.7	0/1.6	0/25.4	7.9/171.6	3.3/35.9	11.6/14.6	—	—
February	0/0.8	5.3/2.2	6.8/25.1	19.0/59.6	9.4/83.8	9.5/8.9	5.8/1.5	8.3/5.3
March	0/0	0/1.9	3.7/33.4	8.6/20.0	5.8/38.4	4.2/5.3	10.7/9.0	2.1/2.8

Gulf Stream side of the front (Fig. 2). During this sampling period, *Leiostomus xanthurus* was a dominant estuarine-dependent species, whose age and size increased from offshore to inshore (Lewis and Judy, 1983; Warlen and Chester, 1985). Apparently both groups spawn in offshore waters and are transported shoreward from warm Gulf Stream influenced water to cold coastal waters (e.g. Fig. 2).

Discussion

Reef Fish Larvae

Our winter ichthyoplankton survey was not effective for capturing commercially or recreationally important reef fish larvae. We collected only one larval red porgy, *Pagrus pagrus*, an important recreational species that is abundant on hard bottom reefs in Onslow Bay (Manooch, 1976; Grimes et al., 1982). Ripe females have been collected off North Carolina from January to April, and peak spawning periods occur during March and April (Manooch, 1976). Larvae of this species have only been collected in small numbers in the South Atlantic Bight during winter ($n = 3$) and spring ($n = 9$), and only in the neuston (Powles, 1977). This species is highly residential (Grimes et al., 1982); therefore, it most likely spawns off North Carolina. The rarity of reef fish larvae in ichthyoplankton surveys in the South Atlantic Bight remains largely unexplained (Powles and Stender, 1976; Powles, 1977). Larvae that were potentially *Mycteroperca microlepis* (i.e. identified to tribe Epinephelini or *Mycteroperca* sp.) were rarely collected. Adult *M. microlepis* and *M. phenax* are the two most abundant *Mycteroperca* species in Onslow Bay (Grimes et al., 1982; Chester et al., 1984). Although their larvae are indistinguishable from each other, *M. microlepis* spawns earlier in the season off North Carolina (winter-early spring, with a peak in late March and early April) than *M. phenax* (April through August, with a peak in May and June) (Matheson et al., 1986; Collins et al., 1987). Like *P. pagrus*, the rarity of *M. microlepis* larvae in the ichthyoplankton remains largely unexplained.

Gulf Stream Intrusions

The occurrence of "tropical" species (mainly mesopelagics) in coastal and open-shelf waters might be evidence of the intrusion of Gulf Stream waters onto the shelf. The intrusions are episodic events (2–14 days) caused by Gulf Stream meanders and filaments (Atkinson, 1985; Lee et al., 1985; Yoder, 1985), and apparently are associated with the upwelling of nutrients (Atkinson, 1985; Paffenhofer, 1985; Yoder, 1985). The intrusions might not only provide a productive food environment for fishes that spawn in concordance with these episodic events but may also serve as mechanisms to transport larvae to shelf waters. During winter, intrusion of Gulf Stream water could transport larvae of estuarine-dependent species that are entrained in Gulf Stream water into shelf waters. For example, the large numbers of *Leiostomus xanthurus* larvae we observed in slope waters in December could be transported north into Raleigh Bay, North Carolina (Fig. 1), by Gulf Stream filaments or meanders.

We suggest that Gulf Stream intrusions transport larvae onto the shelf, but we found no larvae that could have been transported southward into Onslow Bay by the longshore Virginia current (Pietrafesa et al., 1985). Northern genera such as *Ammodytes* frequently occur in ichthyoplankton collections north of Cape Hatteras, North Carolina (Berrien et al., 1978), and should be a good indicator of southerly directed, longshore trans-

port. We did not observe this genus or other northerly taxa (e.g. *Gadus morhua, Pollachius virens*) that are collected north of Cape Hatteras in winter.

Estuarine-dependent Species

Larvae of the estuarine-dependent species *Leiostomus xanthurus, Micropogonias undulatus,* and *Brevoortia tyrannus* are important components of the ichthyoplankton during late fall and winter in Onslow Bay and in North Carolina waters north and south of Onslow Bay (Powles and Stender, 1976; Berrien et al., 1978; this study). Although generally abundant in the study area, they (as well as other taxa) were rarely captured in coastal waters, although they are the most common species in estuarine collections (Warlen and Burke, 1990). Lewis and Judy (1983) observed similar patterns for *L. xanthurus* and *M. undulatus* in Onslow Bay. Mean lengths and ages of *B. tyrannus, L. xanthurus,* and *M. undulatus* progressively increase from offshore to inshore (Warlen, 1982; Lewis and Judy, 1983; Warlen and Chester, 1985; Warlen, 1992), which strongly suggests offshore spawning. Obviously there would be a marked decline in numbers due to high natural mortality rates in the early stages, but their rarity in coastal waters is probably a result of accessibility and vulnerability of larvae to the sampling gear, especially since coastal stations were sampled only during daylight. Inside estuaries, larvae are more accessible because they are concentrated in smaller areas (Lewis and Judy, 1983).

Bothidae

The larvae of several bothids are important components of the ichthyoplankton during late fall and early winter in the lower Middle Atlantic Bight (Chesapeake Bay to Cape Hatteras) (Table 9) and during late fall and throughout the winter in the South Atlantic Bight (Table 4; Powles and Stender, 1976). In the lower Middle Atlantic Bight, bothid larvae were rarely collected during mid- to late-winter (Table 9). During late fall and early winter, *Paralichthys dentatus* larvae were abundant in the lower Middle Atlantic Bight (Table 9) but were not collected before midwinter in Onslow Bay (Table 4), which is in concordance with Smith's (1973) observations that spawning progresses southward with the season. Larvae of *P. albigutta* and *P. lethostigma* have not been reported from the Middle Atlantic Bight (Berrien et al., 1978) but are commonly collected in the South Atlantic Bight during winter and early spring (Table 4;

Table 9

Percentage of bothid larvae captured by area from Chesapeake Bay to Beaufort Inlet, North Carolina. Data (larvae/30 minute tow) are modified from Berrien et al. (1978). When duplicate samples were taken at the same station, data were averaged.

			Area of collection		
Month	Taxon	Number of larvae	South of Cape Hatteras	Transect off Cape Hatteras	North of Cape Hatteras
Nov	*Bothus ocellatus*	183	78	22	0
	Citharichthys arctifrons	87	2	32	66
	Cyclopsetta fimbriata	3	67	33	0
	Etropus microstomus	255	58	31	11
	Paralichthys dentatus	92	11	40	49
	Scophthalmus aquosus	59	15	0	85
	Syacium papillosum	25	68	32	0
Dec	*Bothus ocellatus*	67	46	54	0
	Citharichthys arctifrons	1	0	0	100
	Cyclopsetta fimbriata	1	100	0	0
	Etropus microstomus	246	82	17	1
	Paralichthys dentatus	317	25	35	40
	Scophthalmus aquosus	108	54	23	23
	Syacium papillosum	3	67	33	0
Jan-Feb	*Bothus ocellatus*	8	88	12	0
	Etropus microstomus	33	97	0	3
	Paralichthys dentatus	33	64	27	9
	Scophthalmus aquosus	4	50	0	50

Powles and Stender, 1976). The distribution of *P. albigutta* and *P. lethostigma* larvae coincides with that of the adults, whose northernmost limit is North Carolina (Gutherz, 1967).

Bothus and *Syacium* were reported to be the dominant bothid larvae collected in the South Atlantic Bight during late fall (Powles and Stender, 1976). We never collected *Syacium* and only collected *Bothus* larvae in small numbers throughout the study period (Table 4). Small numbers of *Syacium* and larger numbers of *Bothus* larvae have been previously collected in Raleigh Bay and Onslow Bay but have been rarely collected north of Cape Hatteras (Table 9). *Bothus* larvae appear to be more common on the outer shelf (Table 4; Berrien et al., 1978).

Etropus microstomus larvae were commonly collected in the upper South Atlantic Bight (Tables 4 and 9), but were not noted in Powles and Stender's (1976) survey of the South Atlantic Bight. Although adults of *E. microstomus* range north to New York (Tucker, 1982), larvae were rarely encountered above Cape Hatteras, North Carolina (Table 9). *Scophthalmus aquosus* was commonly collected in the lower Middle Atlantic Bight and Onslow Bay (Tables 4 and 9) but was not noted in Powles and Stender's (1976) survey of the South Atlantic Bight. *Scophthalmus aquosus* larvae were collected in great numbers in the Middle Atlantic Bight (Berrien et al., 1978) and, although adults range from the Gulf of St. Lawrence to Florida, collections of larvae suggest this species is most abundant north of Cape Hatteras.

Cyclopsetta fimbriata larvae are rarely encountered in the Middle Atlantic Bight and in Onslow Bay (Tables 4 and 9; Berrien et al., 1978), but were common during late winter and early spring in Powles and Stender's (1976) survey of the South Atlantic Bight. Collections of larvae coincide with the distribution of adults, whose northernmost limit is North Carolina (Gutherz, 1967).

Absence of Certain Taxa

Conspicuously absent from our collections was the genus *Mugil*, especially *Mugil cephalus* which is a winter spawning, estuarine-dependent species (Powles and Stender, 1976; Ross and Epperly, 1985). *Mugil* are commonly captured in neuston tows (Fahay, 1975; Powles and Stender, 1976) but are not commonly collected in standard bongo tows (Powles and Stender, 1976; Berrien et al., 1978). Other winter spawning taxa whose larvae are known to be neustonic and not commonly collected in this study are the Mullidae and *Scomber* (Powles and Stender, 1976). The gadid *Urophycis*, which was abundant in our collections (Table 6), is even more common in neuston tows (Powles and Stender, 1976) and was probably undersampled in this study. This indicates the need to include neuston tows in ichthyoplankton surveys and points to one limitation of this study.

Conclusions

Larvae of winter spawning estuarine-dependent species were a major component of the ichthyoplankton in Onslow Bay, North Carolina. Most of these (*B. tyrannus*, *L. xanthurus*, *M. undulatus*, *Paralichthys* spp.) are valuable commercial or recreational species (U.S. Department of Commerce, 1992) and, with the exception of larval *P. albigutta* and *P. lethostigma*, are readily identifiable. Results from our study suggest that future studies examining the relationship between primary and secondary production, larval fish abundance, and the front separating warm Gulf Stream waters from cooler shelf waters would be useful. Understanding the early life history strategies of cooccurring, strikingly different life history types (e.g. estuarine-dependent and mesopelagic species) or morphologically similar estuarine-dependent and non-estuarine-dependent species (e.g. the clupeids *B. tyrannus* and *E. teres*) through comparative studies should provide insight into biological mechanisms that enable transport to favorable habitats. Innovative sampling techniques need to be developed to capture larvae of reef fishes, such as *P. pagrus* and *Mycteroperca*.

Acknowledgments

We wish to express our appreciation to all those individuals who participated in the cruises, including the crew of the RV *John deWolf II*. Special thanks to Dean Ahrenholz, Stanley Warlen, two anonymous reviewers who made valuable suggestions, and Mark Fonseca who provided valuable computer programming expertise. This work was supported in part by a cooperative agreement between NMFS and the U.S. Department of Energy.

Literature Cited

Ahlstrom, E. H., J. L. Butler, and B. Y. Sumida.
1976. Pelagic stromateoid fishes (Pisces, Perciformes) of the eastern Pacific: kinds, distributions, and early life histories and observations on five of these from the northwest Atlantic. Bull. Mar. Sci. 26:285–402.

Atkinson, L. P.
1985. Hydrography and nutrients of the southeastern U.S. continental shelf. *In* L. P. Atkinson, D. W. Menzel, and K. A. Bush (eds.), Oceanography of the southeastern U.S. continental shelf, p. 77–92. Am. Geophys. Union, Coast. Est. Sci. 2.

Berrien, P. L., M. P. Fahay, A. W. Kendall Jr., and W. G. Smith.
1978. Ichthyoplankton from the RV *Dolphin* survey of continental shelf waters between Martha's Vineyard, Massachusetts and Cape Lookout, North Carolina, 1965–66. NOAA, NMFS, Sandy Hook Lab., Tech. Ser. Rep. No. 15, 152 p.

Chester, A. J., G. R. Huntsman, P. A. Tester, and C. S. Manooch III.
1984. South Atlantic Bight reef fish communities as represented in hook and line catches. Bull. Mar. Sci. 34:267–279.

Collins, M. R., C. W. Waltz, W. A. Roumillat, and D. L. Stubbs.
1987. Contribution to the life history and reproductive biology of gag, *Mycteroperca microlepis* (Serranidae), in the South Atlantic Bight. Fish. Bull. 85:648–653.

Comyns, B. H., and G. C. Grant.
1993. Identification and distribution of *Urophycis* and *Phycis* (Pisces, Gadidae) larvae and pelagic juveniles in the U.S. Middle Atlantic Bight. Fish. Bull. 91:210–223.

Fahay, M. P.
1975. An annotated list of larval and juvenile fishes captured with surface-towed meter net in the South Atlantic Bight during four RV *Dolphin* cruises between May 1967 and February 1968. NOAA Tech. Rep. NMFS SSRF-685, 39 p.
1983. Guide to the early stages of marine fishes occurring in the western North Atlantic Ocean, Cape Hatteras to the southern Scotian Shelf. J. Northwest Atl. Fish. Sci. 4:1–423.

Grimes, C. B., C. S. Manooch, and G. R. Huntsman.
1982. Reef and rock outcropping fishes of the outer continental shelf of North Carolina and South Carolina, and ecological notes on the red porgy and vermilion snapper. Bull. Mar. Sci. 32:277–289.

Gutherz, E. J.
1967. Field guide to the flatfishes of the family Bothidae in the western North Atlantic. U.S. Fish Wildl. Serv., Circ. 263, 47 p.

Lee, T. N., V. Kourafalou, J. D. Wang, W. J. Ho, J. O. Blanton, and L. P. Atkinson.
1985. Shelf circulation from Cape Canaveral to Cape Fear during winter. *In* L. P. Atkinson, D. W. Menzel, and K. A. Bush (eds.), Oceanography of the southeastern U.S. continental shelf, p. 33–62. Am. Geophys. Union, Coast. Est. Sci. 2.

Lewis, R. M., and M. H. Judy.
1983. The occurrence of spot, *Leiostomus xanthurus*, and Atlantic croaker, *Micropogonias undulatus*, larvae in Onslow Bay and Newport River estuary, North Carolina. Fish. Bull. 81:405–412.

Manooch, C. S., III.
1976. Reproductive cycle, fecundity, and sex ratios of the red porgy, *Pagrus pagrus* (Pisces: Sparidae) in North Carolina. Fish. Bull. 74:775–781.

Matheson, R. H., III, G. R. Huntsman, and C. S. Manooch III.
1986. Age, growth, mortality, food and reproduction of the scamp, *Mycteroperca phenax*, collected off North Carolina and South Carolina. Bull. Mar. Sci. 38:300–312.

Methven, D. A.
1985. Identification and development of larval and juvenile *Urophycis chuss*, *U. tenius* and *Phycis chesteri* (Pisces: Gadidae) from the Northwest Atlantic. J. Northwest Atl. Fish. Sci. 6:9–20.

Olney, J. E., and D. F. Markle.
1979. Description and occurrence of vexillifer larvae of *Echiodon* (Pisces: Carapidae) in the western North Atlantic and notes on other carapid vexillifers. Bull. Mar. Sci. 29:365–379.

Paffenhofer, G A.
1985. The abundance and distribution of zooplankton on the southeastern shelf of the United States. *In* L. P. Atkinson, D. W. Menzel, and K. A. Bush (eds.), Oceanography of the southeastern U.S. continental shelf, p. 104–117. Am. Geophys. Union, Coast. Est. Sci. 2.

Pietrafesa, L. J., G. S. Janowitz, and P. A. Wittmann.
1985. Physical oceanographic processes in the Carolina Capes. *In* L. P. Atkinson, D. W. Menzel, and K. A. Bush (eds.), Oceanography of the southeastern U.S. continental shelf, p. 23–32. Am. Geophys. Union, Coast. Est. Sci. 2.

Powles, H.
1977. Larval distributions and recruitment hypotheses for snappers and groupers of the South Atlantic Bight. Proc. 31st Annu. Conf. S.E. Assoc. Game Fish. Comm., 9–12 Oct. 1977, San Antonio, Texas, p. 361–371.

Powles, H, and B. W. Stender.
1976. Observations on composition, seasonality and distribution of ichthyoplankton from MARMAP cruises in the South Atlantic Bight in 1973. S.C. Mar. Res. Cent., Tech. Rep. Ser. No. 11, 47 p.

Robins, C. R., and G. C. Ray.
1986. A field guide to Atlantic coast fishes of North America. Houghton Mifflin Co., Boston, 354 p.

Ross, S. W., and S. P. Epperly.
1985. Utilization of shallow estuarine nursery areas by fishes in Pamlico Sound and adjacent tributaries, North Carolina. *In* A. Yanez-Aranciba (ed.), Fish community ecology in estuaries and coastal lagoons: towards an ecosystem integration, p. 207–232. DR(R) UNAM Press, Mexico.

Schwartz, F. J.
1989. Zoogeography and ecology of fishes inhabiting North Carolina's marine waters to depths of 600 meters. *In* R. Y. George and A. W. Hulbert (eds.), North Carolina coastal oceanography symposium, p. 335–374. NOAA-NURP Rept. 89-2.

Smith, W. G.
1973. The distribution of summer flounder, *Paralichthys dentatus*, eggs and larvae on the continental shelf between Cape Cod and Cape Lookout, 1965–66. Fish. Bull. 71:527–548.

Smith, P. E., and S. L. Richardson.
1977. Standard techniques for pelagic fish egg and larva surveys. FAO Fish. Tech. Pap. No. 175, 100 p.

Struhsaker, P.
1969. Demersal fish resources: composition, distribution, and commercial potential of the continental shelf stocks off southeastern United States. U.S. Fish Wildl. Serv., Fish. Ind. Res. 4:261–300.

Tucker, J. W., Jr.
1982. Larval development of *Citharichthys cornutus*, *C. gymnorhinus*, *C. spilopterus*, and *Etropus crossotus* (Bothidae), with notes on larval occurrence. Fish. Bull. 80: 35–73.

U.S. Department of Commerce.
1992. Fisheries of the United States, 1991. NOAA, NMFS Cur. Fish. Stat. 9100, 113 p.

Warlen, S. M.
1982. Age and growth of larvae and spawning time of Atlantic croaker in North Carolina. Proc. Ann. Conf. S.E. Assoc. Fish. Wildl. Agencies 34:204–214.
1992. Age, growth and size distribution of larval Atlantic menhaden off North Carolina. Trans. Am. Fish. Soc. 121:588–598.

Warlen, S. M., and A. J. Chester.
1985. Age, growth, and distribution of larval spot, *Leiostomus xanthurus*, off North Carolina. Fish. Bull. 83:587–600.

Warlen, S. M., and J. S. Burke.
1990. Immigration of larvae of fall/winter spawning marine fishes into a North Carolina estuary. Estuaries 13:453–461.

Yoder, J. A.
1985. Environmental control of phytoplankton production on the southeastern U.S. continental shelf. *In* L. P. Atkinson, D. W. Menzel, and K. A. Bush (eds.), Oceanography of the southeastern U.S. continental shelf, p. 93–103. Am. Geophys. Union, Coast. Est. Sci. 2.

Appendix Table 1

Relative abundance of ichthyoplankton by station during November 1979. An asterisk (*) indicates taxa that are exclusively "tropical" (see definitions in Methods).

Station	Family	Taxon	Relative abundance (No./100 m^3)
11	Sciaenidae	Unidentified	0.9
12	Clupeidae	*Brevoortia tyrannus*	0.9
	Engraulidae	*Engraulis eurystole*	0.9
	Unidentified		1.8
13	Syngnathidae	*Syngnathus* sp.	3.1
14	No samples		
15	Bothidae	*Bothus* sp.	1.3
		Citharichthys sp.	2.2
		Unidentified	8.1
	Callionymidae	Unidentified	1.3
	Clupeidae	*Brevoortia tyrannus*	6.3
	Cynoglossidae	*Symphurus* sp.	1.3
	Elopidae	*Elops saurus*	1.6
	Engraulidae	*Engraulis eurystole*	3.4
	Gobiidae	Unidentified	3.8
	Gonostomatidae	*Cyclothone* sp.*	1.3
	Ophichthidae	*Ophichthus* sp.	1.7
	Ophidiidae	*Ophidion selenops*	1.6
		Otophidium omostigmum	1.6
	Sciaenidae	*Leiostomus xanthurus*	43.2
		Micropogonias undulatus	229.9
	Serranidae	Serraninae	3.2
	Synodontidae	Unidentified	1.6
	Unidentified		13.7
	Bothidae	*Etropus* sp.	1.6
16	Carangidae	*Decapterus punctatus*	1.6
	Engraulidae	*Engraulis eurystole*	1.6
	Labridae	*Hemipteronotus* sp.	1.6
	Ophichthidae	*Ophichthus* sp.	1.6
	Pomacentridae	*Abudefduf taurus*	1.6
	Scaridae	Unidentified	1.6
	Sciaenidae	*Leiostomus xanthurus*	3.3
		Micropogonias undulatus	56.9
	Scorpaenidae	Unidentified	1.6
	Triglidae	*Prionotus* sp.	8.1
17	No samples		
18	No samples		

Appendix Table 2

Relative abundance of ichthyoplankton by station during December 1979. Asterisks indicate taxa that are exclusively "tropical" (*) or exclusively lower shelf (**) (see definitions in Methods).

Station	Family	Taxon	Relative abundance (No./100 m^3)
11	Bothidae	*Scophthalmus aquosus*	1.0
	Engraulidae	*Anchoa hepsetus*	3.7
		Engraulis eurystole	0.9
	Sciaenidae	*Micropogonias undulatus*	1.9
	Unidentified		0.9
12	Balistidae	Unidentified	1.0
	Bothidae	*Paralichthys albigutta*	2.5
		Scophthalmus aquosus	2.9
	Ophichthidae	*Myrophis punctatus*	1.3
	Sciaenidae	*Micropogonias undulatus*	1.8
13	Bothidae	*Paralichthys lethostigma*	5.6
		Paralichthys sp.	7.0
		Scophthalmus aquosus	4.9
	Gobiidae	*Gobionellus* sp.	2.8
	Sciaenidae	*Leiostomus xanthurus*	5.6
		Micropogonias undulatus	4.6
	Unidentified		2.8
14	Balistidae	Unidentified	4.1
	Bothidae	*Bothus* sp.	2.0
	Callionymidae	Unidentified	2.3
	Clupeidae	*Brevoortia tyrannus*	4.1
	Gadidae	Unidentified	22.4
		Urophycis regia	4.6
	Ophidiidae	Unidentified	6.1
	Sciaenidae	*Leiostomus xanthurus*	4.6
	Syngnathidae	*Hippocampus erectus*	2.3
	Triglidae	*Prionotus* sp.	8.0
	Unidentified		5.5
15	Myctophidae	Unidentified*	7.0
	Ophichthidae	Unidentified	1.8
	Sciaenidae	*Micropogonias undulatus*	1.8
	Unidentified		3.5
16	Acanthuridae	*Acanthurus* sp.	1.9
	Ariommatidae	*Ariomma* sp.	4.2
	Bothidae	*Bothus* sp.	1.6
		Etropus sp.	2.8
		Unidentified	1.4
	Bregmacerotidae	*Bregmaceros* sp.*	1.4
	Callionymidae	Unidentified	1.6
	Carangidae	*Selar crumenophthalmus*	6.6
	Caristiidae	*Caristius* sp.*	1.9
	Centriscidae	*Macroramphosus* sp.**	7.0
	Ceratiidae	Unidentified*	1.9
	Congridae	Unidentified	1.4
	Gonostomatidae	*Cyclothone* sp.*	8.4
		Unidentified*	2.8
	Myctophidae	*Diogenichthys atlanticus**	2.8
		*Hygophum hygomii**	1.4
		Notoscopelus sp.*	1.4
		Unidentified*	5.5
	Nomeidae	*Psenes* sp.*	1.4

Appendix Table 2 (Continued)

Station	Family	Taxon	Relative abundance (No./100 m^3)
	Scaridae	Unidentified	2.8
	Sciaenidae	*Leiostomus xanthurus*	7.0
		Micropogonias undulatus	1.4
	Serranidae	*Anthias* sp.	1.4
		Epinephelini	1.4
	Stomiidae	*Stomias* sp.*	1.9
	Synodontidae	Unidentified	1.4
	Unidentified		16.2
17	Acanthuridae	*Acanthurus* sp.	1.6
	Antennariidae	*Antennarius* sp.	0.3
	Apogonidae	Unidentified	0.3
	Argentinidae	Unidentified	0.3
	Ariommatidae	*Ariomma* sp.	0.5
	Balistidae	Unidentified	0.3
	Bothidae	*Bothus* sp.	0.6
		Cyclopsetta fimbriata	0.6
	Bramidae	*Pterycombus brama***	0.3
	Bregmacerotidae	*Bregmaceros* sp.*	0.8
	Callionymidae	Unidentified	0.6
	Carangidae	*Selar crumenophthalmus*	1.5
		Unidentified	0.3
	Centriscidae	*Macroramphosus* sp.**	0.3
	Chiasmodontidae	Unidentified*	0.3
	Clupeidae	*Etrumeus teres*	0.3
	Congridae	*Ariosoma* sp.	0.5
		Unidentified	0.8
	Cynoglossidae	*Symphurus* sp.	0.3
	Gadidae	*Urophycis* sp.	0.3
	Gempylidae	*Gempylus serpens**	0.3
	Gobiidae	Unidentified	0.3
	Gonostomatidae	*Cyclothone* sp.*	1.3
		Unidentified*	2.7
	Muraenidae	Unidentified	0.3
	Myctophidae	*Lampadena luminosa**	0.3
		Unidentified*	3.2
		Lampanyctus sp.*	0.6
	Ophichthidae	*Myrophis punctatus*	0.3
		Ophichthus sp.	0.5
	Ophidiidae	*Brotula barbata**	0.3
		Ophidion sp.	0.3
		Unidentified	0.3
	Paralepididae	Unidentified*	0.6
	Photichthyidae	*Vinciguerria nimbaria**	0.3
		*V. poweriae**	0.3
	Scaridae	Unidentified	0.8
	Sciaenidae	*Leiostomus xanthurus*	1.1
		Micropogonias undulatus	0.5
	Scopelarchidae	Unidentified*	0.3
		Scorpaena sp.	0.6
	Scorpaenidae	Unidentified	0.9
	Serranidae	*Anthias* sp.	0.3
		Anthiinae	0.3
		Serraninae	0.6
	Stomiidae	*Stomias* sp.*	0.3
	Synodontidae	Unidentified	0.3
	Unidentified		11.0

Appendix Table 2 (Continued)

Station	Family	Taxon	Relative abundance (No./100 m^3)
18	Apogonidae	Unidentified	0.3
	Balistidae	Unidentified	0.3
	Bothidae	*Bothus* sp.	1.6
		Cyclopsetta fimbriata	0.3
		Etropus microstomus	0.6
		Etropus sp.	2.2
	Bregmacerotidae	*Bregmaceros* sp.*	0.3
	Carangidae	*Decapterus macarellus*	0.3
		Hemicaranx amblyrhynchus	0.6
		Unidentified	4.1
	Chiasmodontidae	Unidentified*	0.3
	Clupeidae	*Brevoortia tyrannus*	0.6
		Etrumeus teres	1.6
	Congridae	Unidentified	0.3
	Engraulidae	*Anchoa hepsetus*	0.3
		Engraulis eurystole	1.3
	Gadidae	*Urophycis* sp.	0.6
	Gempylidae	*Diplospinus multistriatus**	0.3
		Unidentified*	0.3
	Gonostomatidae	*Cyclothone* sp.*	1.0
		Unidentified*	0.3
	Holocentridae	Unidentified	0.3
	Myctophidae	Unidentified*	2.5
	Ophichthidae	*Myrophis punctatus*	0.3
		Unidentified	1.6
	Ophidiidae	*Ophidion selenops*	1.6
		Unidentified	1.6
	Paralepididae	Unidentified*	0.6
	Scaridae	Unidentified	1.6
	Sciaenidae	*Leiostomus xanthurus*	45.4
		Micropogonias undulatus	6.0
	Scorpaenidae	Unidentified	1.0
	Serranidae	*Anthias* sp.	0.3
		Serraninae	0.6
	Synodontidae	Unidentified	1.0
	Unidentified		28.5

Appendix Table 3

Relative abundance of ichthyoplankton by station during January 1980. An asterisk (*) indicates taxa that are exclusively "tropical" (see definitions in Methods).

Station	Family	Taxon	Relative abundance (No./100 m^3)
11	Bothidae	Unidentified	0.7
	Clupeidae	*Brevoortia tyrannus*	2.8
	Cynoglossidae	*Symphurus* sp.	0.7
	Gobiidae	Unidentified	0.7
	Ophichthidae	*Ophichthus* sp.	0.7
	Sciaenidae	*Leiostomus xanthurus*	4.2
	Sparidae	*Lagodon rhomboides*	0.7
12	Clupeidae	*Brevoortia tyrannus*	1.6
13	Clupeidae	*Brevoortia tyrannus*	22.3
	Gadidae	*Urophycis regia*	9.8
	Sciaenidae	*Leiostomus xanthurus*	0.9
	Sparidae	*Lagodon rhomboides*	2.2
	Unidentified		1.9
14	Bothidae	*Citharichthys gymnorhinus**	4.2
		Citharichthys sp.	4.9
		Paralichthys dentatus	6.5
		Paralichthys sp.	7.1
		Unidentified	2.1
	Carangidae	Unidentified	1.6
	Clupeidae	*Brevoortia tyrannus*	14.6
	Gadidae	*Urophycis floridiana*	1.6
		Urophycis regia	17.1
	Gobiidae	Unidentified	2.1
	Myctophidae	Unidentified*	1.0
	Ophichthidae	*Apterichtus ansp**	1.6
		Myrophis punctatus	1.9
		Ophichthus sp.	1.9
	Photichthyidae	*Vinciguerria nimbaria**	1.0
	Sciaenidae	*Leiostomus xanthurus*	137.2
		Micropogonias undulatus	2.7
	Sparidae	*Lagodon rhomboides*	3.5
		Unidentified	4.2
	Syngnathidae	*Syngnathus* sp.	1.9
	Unidentified		9.1
15	Bothidae	*Citharichthys* sp.	4.5
		Etropus sp.	7.2
		Paralichthys dentatus	2.0
		Paralichthys sp.	1.5
	Callionymidae	Unidentified	2.0
	Carangidae	Unidentified	1.1
	Clupeidae	*Brevoortia tyrannus*	2.0
		Etrumeus teres	3.2
	Gadidae	*Urophycis regia*	15.4
	Gobiidae	Unidentified	3.0
	Gonostomatidae	Unidentified*	0.8
	Myctophidae	Unidentified*	0.9
	Ophichthidae	*Myrophis punctatus*	2.0
	Ophidiidae	Unidentified*	3.0
	Paralepididae	Unidentified*	1.5
	Sciaenidae	*Leiostomus xanthurus*	10.8
		Micropogonias undulatus	4.7
	Serranidae	*Diplectrum* sp.	3.0

Appendix Table 3 (Continued)

Station	Family	Taxon	Relative abundance (No./100 m^3)
	Sparidae	*Lagodon rhomboides*	14.9
		Unidentified	63.3
	Syngnathidae	*Syngnathus* sp.	1.1
	Synodontidae	Unidentified	1.5
	Triglidae	*Prionotus* sp.	3.7
	Unidentified		21.1
16	Bothidae	*Citharichthys* sp.	1.4
		Etropus sp.	5.8
	Clupeidae	*Brevoortia tyrannus*	1.0
		Etrumeus teres	8.7
	Engraulidae	*Engraulis eurystole*	1.0
	Gadidae	*Urophycis regia*	6.0
	Gobiidae	Unidentified	1.2
	Gonostomatidae	Unidentified*	1.4
	Myctophidae	*Diaphus* sp.*	1.4
		Hygophum sp.*	1.4
	Ophichthidae	*Ophichthus* sp.	1.0
	Paralepididae	*Stemonosudis intermedia**	1.0
		Unidentified*	1.4
	Photichthyidae	*Vinciguerria nimbaria**	4.9
	Sciaenidae	*Leiostomus xanthurus*	3.9
		Micropogonias undulatus	1.0
	Serranidae	*Diplectrum* sp.	1.0
	Sparidae	*Lagodon rhomboides*	8.7
	Syngnathidae	*Syngnathus* sp.	1.0
		Unidentified	1.4
	Unidentified		31.0
17	No samples		
18	No samples		

Appendix Table 4

Relative abundance of ichthyoplankton by station during February 1980. Asterisks indicate taxa that are exclusively "tropical" (*) or exclusively lower shelf (**) (see definitions in text).

Station	Family	Taxon	Relative abundance (No./100 m^3)
11	Sparidae	*Lagodon rhomboides*	0.8
		Stenotomus chrysops	0.7
12	Gadidae	*Urophycis floridiana*	0.8
		U. regia	0.8
	Gonostomatidae	Unidentified*	1.6
	Myctophidae	*Ceratoscopelus maderensis**	0.8
		*Diogenichthys atlanticus**	0.8
		Hygophum sp.*	0.8
		Unidentified*	0.8
	Photichthyidae	*Vinciguerria attenuata**	0.8
	Sciaenidae	*Leiostomus xanthurus*	0.8
	Sparidae	*Lagodon rhomboides*	1.4
	Unidentified	Unidentified	2.3
13	Bothidae	*Bothus* sp.	1.6
		Paralichthys albigutta	1.6
	Clupeidae	*Brevoortia tyrannus*	8.4
	Eleotridae	*Dormitator maculatus*	3.4
	Gadidae	*Enchelyopus cimbrius*	1.6
		Urophycis regia	3.4
	Haemulidae	Unidentified	1.5
	Myctophidae	*Ceratoscopelus maderensis**	6.8
	Sciaenidae	*Leiostomus xanthurus*	13.5
	Scorpaenidae	*Helicolenus dactylopterus*	1.6
	Serranidae	*Diplectrum formosum*	1.5
	Sparidae	*Lagodon rhomboides*	1.6
	Stromateidae	*Peprilus triacanthus*	1.9
	Unidentified		5.0
14	Bothidae	*Etropus microstomus*	7.6
		Etropus sp.	6.8
		Paralichthys albigutta	4.1
		P. dentatus	1.6
		P. lethostigma	1.8
		Paralichthys sp.	4.2
		Unidentified	4.1
	Bregmacerotidae	*Bregmaceros* sp.*	1.4
	Carapidae	*Echiodon* sp.*	1.8
	Clupeidae	*Etrumeus teres*	
	Cynoglossidae	*Symphurus* sp.	2.5
	Engraulidae	*Engraulis eurystole*	1.6
	Gadidae	*Enchelyopus cimbrius*	1.6
		Urophycis floridiana	4.6
		U. regia	4.2
	Gempylidae	*Diplospinus multistriatus**	1.6
	Gonostomatidae	*Cyclothone* sp.*	2.2
	Labridae	*Hemipteronotus* sp.	1.6
	Myctophidae	*Diogenichthys atlanticus**	1.8
		Unidentified*	5.6
		Lampanyctus sp.*	1.6
	Nemichthyidae	Unidentified	1.6
	Notosudidae	*Scopelosaurus mauli**	1.5
	Ophichthidae	Unidentified	1.6
	Ophidiidae	*Ophidion grayi*	3.1
		Unidentified	1.6
	Paralepididae	*Lestidiops jayakari**	1.8

Appendix Table 4 (Continued)

Station	Family	Taxon	Relative abundance (No./100 m^3)
	Scaridae	Unidentified	1.6
	Sciaenidae	*Leiostomus xanthurus*	41.7
		Micropogonias undulatus	3.5
	Scorpaenidae	*Helicolenus dactylopterus*	2.1
		Unidentified	1.4
	Serranidae	*Anthias* sp.	1.5
		Centropristis sp.	1.6
		Diplectrum sp.	1.5
	Sparidae	*Lagodon rhomboides*	2.7
		Pagrus pagrus	1.6
	Synodontidae	*Synodus* sp.	3.5
		Unidentified	1.6
	Triglidae	*Prionotus* sp.	1.5
	Unidentified		15.3
15	Apogonidae	Unidentified	1.2
	Ariommatidae	*Ariomma regulus**	1.4
	Bothidae	*Etropus crossotus*	5.8
		E. microstomus	3.4
		Etropus sp.	7.0
		Paralichthys albigutta	5.6
		P. dentatus	6.3
		P. lethostigma	5.0
		Paralichthys sp.	6.2
		Unidentified	3.2
	Callionymidae	*Callionymus* sp.	1.9
	Carangidae	*Seriola dumerili*	1.3
		Unidentified	3.2
	Centrolophidae	*Hyperoglyphe* sp.	1.0
	Chaetodontidae	*Chaetodon* sp.	1.0
	Clinidae	Unidentified*	1.9
	Clupeidae	*Brevoortia tyrannus*	15.9
		Etrumeus teres	21.8
	Cynoglossidae	*Symphurus* sp.	2.7
	Engraulidae	*Anchoa hepsetus*	1.7
		Engraulis eurystole	1.3
	Gadidae	*Enchelyopus cimbrius*	1.7
		Urophycis floridiana	9.7
		U. regia	16.3
	Gobiidae	*Microgobius* sp.	1.7
		Unidentified	3.0
	Gonostomatidae	*Cyclothone* sp.*	1.9
	Labridae	*Hemipteronotus* sp.	1.4
	Lophiidae	*Lophius americanus*	1.0
	Malacanthidae	*Lopholatilus chamaeleonticeps*	1.9
	Myctophidae	*Hygophum* sp.*	1.0
		Unidentified*	2.2
	Ophichthidae	Unidentified	1.3
	Ophidiidae	*Lepophidium profundorum***	2.4
		Ophidion grayi	4.9
		Unidentified	4.2
	Paralepididae	Unidentified*	1.0
	Sciaenidae	*Leiostomus xanthurus*	20.3
		Micropogonias undulatus	2.7
	Scorpaenidae	*Helicolenus dactylopterus*	1.5
	Serranidae	*Anthias* sp.	1.0
		Diplectrum sp.	2.1
	Sparidae	*Lagodon rhomboides*	21.8
	Stromateidae	*Peprilus triacanthus*	1.4

Appendix Table 4 (Continued)

Station	Family	Taxon	Relative abundance (No./100 m^3)
	Syngnathidae	*Syngnathus* sp.	2.2
	Synodontidae	Unidentified	1.5
	Tetraodontidae	Unidentified	1.3
	Triglidae	Unidentified	5.1
	Unidentified		12.2
16	Ariommatidae	*Ariomma* sp.	1.1
	Bothidae	*Bothus* sp.	1.4
		Etropus microstomus	2.6
		Paralichthys sp.	2.7
		Paralichthys sp.	1.7
		Unidentified	10.5
	Bregmacerotidae	*Bregmaceros* sp.*	1.6
	Centriscidae	*Macroramphosus* sp.**	1.1
	Clupeidae	*Brevoortia tyrannus*	1.1
		Etrumeus teres	2.2
	Gadidae	*Urophycis floridiana*	8.0
		U. regia	2.8
		Urophycis sp.	11.3
	Gobiidae	Unidentified	1.2
	Gonostomatidae	*Cyclothone* sp.*	1.3
	Labridae	*Hemipteronotus* sp.	1.4
	Lophiidae	*Lophius americanus*	1.1
	Myctophidae	Unidentified*	1.5
	Ophichthidae	Unidentified	1.7
	Photichthyidae	*Vinciguerria nimbaria**	1.1
	Sciaenidae	*Leiostomus xanthurus*	2.3
		Micropogonias undulatus	1.1
	Scomberesocidae	*Scomberesox saurus*	1.1
	Scorpaenidae	*Helicolenus dactylopterus*	5.3
		Unidentified	1.4
	Serranidae	*Anthias* sp.	1.1
		Diplectrum sp.	1.1
		Unidentified	1.4
	Synodontidae	Unidentified	2.2
	Triglidae	*Prionotus* sp.	2.2
	Unidentified		15.3
17	Bothidae	*Bothus* sp.	0.3
		*Citharichthys cornutus***	0.3
		*C. gymnorhinus**	0.3
		Citharichthys sp.	0.3
		Etropus microstomus	0.5
		Etropus sp.	0.9
		Paralichthys dentatus	0.3
		Paralichthys sp.	0.3
	Clupeidae	*Brevoortia tyrannus*	0.3
		Etrumeus teres	3.8
	Congridae	Unidentified	0.3
	Cynoglossidae	*Symphurus* sp.	0.5
	Engraulidae	Engraulis eurystole	0.3
	Gadidae	*Urophycis* sp.	6.5
	Gobiidae	Unidentified	0.5
	Gonostomatidae	*Cyclothone* sp.*	1.4
		*Gonostoma elongatum**	0.3
		Unidentified*	0.6
	Myctophidae	Unidentified*	2.7
	Nemichthyidae	Unidentified	0.3
	Nomeidae	*Psenes pellucidus**	0.3

Appendix Table 4 (Continued)

Station	Family	Taxon	Relative abundance (No./100 m^3)
	Ophichthidae	*Ophichthus* sp.	0.3
		Unidentified	0.6
	Ophidiidae	Unidentified	0.9
	Sciaenidae	*Leiostomus xanthurus*	0.3
		Micropogonias undulatus	0.3
	Scomberesocidae	*Scomberesox saurus*	0.3
	Scorpaenidae	*Helicolenus dactylopterus*	1.0
	Stomiidae	Unidentified*	0.3
	Synodontidae	Unidentified	0.7
	Unidentified		7.7
18	Bothidae	*Bothus* sp.	0.8
		*Citharichthys gymnorhinus**	0.8
		Cyclopsetta fimbriata	0.3
		Etropus sp.	0.4
		Unidentified	1.2
	Bregmacerotidae	*Bregmaceros* sp.*	0.3
	Callionymidae	Unidentified	0.3
	Carangidae	Unidentified	0.6
	Centriscidae	*Macroramphosus* sp.**	0.5
	Centrolophidae	*Hyperoglyphe* sp.	0.3
	Clupeidae	*Brevoortia tyrannus*	3.2
		Etrumeus teres	10.2
	Congridae	Unidentified	0.3
	Cynoglossidae	*Symphurus* sp.	0.3
	Gadidae	*Enchelyopus cimbrius*	0.3
		Urophycis sp.	5.9
	Gobiidae	Unidentified	2.0
	Gonostomatidae	*Cyclothone* sp.*	1.3
		Unidentified*	1.4
	Melamphaidae	*Melamphaes simms***	0.3
	Moridae	Unidentified**	0.3
	Myctophidae	Unidentified*	1.8
	Ophichthidae	*Ophichthus* sp.	0.3
		Unidentified	0.3
	Paralepididae	*Lestidiops affinis**	0.3
	Photichthyidae	*Vinciguerria poweriae**	1.1
	Priacanthidae	Unidentified	0.3
	Scaridae	Unidentified	0.3
	Sciaenidae	*Leiostomus xanthurus*	1.8
		Micropogonias undulatus	0.3
		Unidentified	0.3
	Scomberesocidae	*Scomberesox saurus*	0.7
	Scorpaenidae	*Helicolenus dactylopterus*	3.7
		Unidentified	2.6
	Serranidae	Anthiinae	0.3
		Serraninae	0.6
	Synodontidae	Unidentified	1.1
	Tetraodontidae	Unidentified	0.3
	Unidentified		19.9

Appendix Table 5

Relative abundance of ichthyoplankton by station during March 1980. Asterisks indicate taxa that are exclusively Caribbean (*) or exclusively lower shelf (**) (see definitions in Methods).

Station	Family	Taxon	Relative abundance (No./100 m^3)
11	No larvae collected		
12	Bothidae	*Paralichthys* sp.	0.9
	Clupeidae	*Brevoortia tyrannus*	1.0
	Unidentified		1.0
13	Bothidae	*Etropus* sp.	2.6
		Paralichthys sp.	7.9
	Clupeidae	*Brevoortia tyrannus*	19.3
	Gadidae	*Enchelyopus cimbrius*	2.6
		Urophycis regia	2.9
	Gonostomatidae	Unidentified*	1.0
	Myctophidae	*Hygophum* sp.*	2.7
	Ophidiidae	Unidentified	5.4
	Sciaenidae	*Leiostomus xanthurus*	2.3
	Serranidae	*Diplectrum* sp.	5.0
	Sparidae	*Lagodon rhomboides*	3.9
	Stromateidae	*Peprilus triacanthus*	2.4
	Syngnathidae	*Syngnathus* sp.	1.0
14	Bothidae	*Etropus* sp.	7.2
		Paralichthys sp.	2.9
	Clupeidae	*Brevoortia tyrannus*	2.9
	Cynoglossidae	*Symphurus diomedianus*	4.7
		S. plagiusa	17.1
	Gadidae	*Enchelyopus cimbrius*	1.1
		Urophycis regia	3.8
	Gobiidae	Unidentified	2.9
	Myctophidae	Unidentified*	5.7
	Photichthyidae	*Vinciguerria nimbaria**	2.9
	Sciaenidae	*Leiostomus xanthurus*	11.4
		Micropogonias undulatus	2.9
	Synodontidae	*Synodus* sp.	2.3
		Unidentified	5.7
	Unidentified		7.0
15	Bothidae	*Etropus microstomus*	14.2
		Paralichthys dentatus	3.7
		P. squamilentus	1.0
	Bregmacerotidae	*Bregmaceros* sp.*	1.1
	Carangidae	Unidentified	3.0
	Centriscidae	*Macroramphosus* sp.**	1.0
	Clupeidae	*Brevoortia tyrannus*	10.7
		Etrumeus teres	11.6
	Cynoglossidae	*Symphurus* sp.	3.2
	Gadidae	*Urophycis floridiana*	12.2
		U. regia	35.6
	Gobiidae	Unidentified	3.4
	Gonostomatidae	*Cyclothone* sp.*	1.1
	Mullidae	*Mullus auratus*	1.1
	Myctophidae	*Ceratoscopelus* sp.*	1.1
		Unidentified*	2.6
	Ophidiidae	*Lepophidium profundorum***	4.7
		Ophidion grayi	11.9
		O. selenops	6.3
		Ophidion sp.	6.1
		Unidentified	1.6

Appendix Table 5 (Continued)

Station	Family	Taxon	Relative abundance (No./100 m^3)
	Sciaenidae	*Leiostomus xanthurus*	13.5
		Micropogonias undulatus	1.7
		Anthias sp.	2.2
	Serranidae	*Centropristis* sp.	2.0
		Diplectrum sp.	4.7
		Mycteroperca sp.	2.4
	Sparidae	*Lagodon rhomboides*	8.8
	Stromateidae	*Peprilus triacanthus*	5.9
	Syngnathidae	Unidentified	2.0
	Synodontidae	Unidentified	2.3
	Triglidae	*Prionotus* sp.	1.0
	Unidentified		14.7
16	Balistidae	*Canthidermis maculatus**	1.1
	Belonidae	Unidentified	1.8
	Bothidae	*Bothus* sp.	1.7
		Cyclopsetta fimbriata	1.4
		Etropus sp.	4.1
		Paralichthys squamilentus	1.1
		Unidentified	1.3
	Bregmacerotidae	*Bregmaceros* sp.*	1.7
	Carangidae	*Oligoplites saurus*	1.8
		Unidentified	0.9
	Clupeidae	*Brevoortia tyrannus*	4.4
		Etrumeus teres	18.2
	Cynoglossidae	*Symphurus* sp.	1.8
	Gadidae	*Urophycis floridiana*	1.8
		U. regia	4.5
	Holocentridae	*Holocentrus* sp.	1.7
	Lophiidae	*Lophius americanus*	3.2
	Myctophidae	Unidentified*	2.1
	Ophichthidae	Unidentified	1.8
	Ophidiidae	*Ophidion selenops*	1.1
		Unidentified	1.8
	Photichthyidae	*Vinciguerria nimbaria**	1.1
	Sciaenidae	*Leiostomus xanthurus*	0.9
	Scombridae	*Scomber japonicus*	3.6
	Scorpaenidae	*Helicolenus dactylopterus*	1.7
	Serranidae	*Anthias* sp.	1.8
		Diplectrum sp.	1.7
		Epinephelini	2.0
	Syngnathidae	Unidentified	1.8
	Synodontidae	Unidentified	2.3
	Tetraodontidae	*Sphoeroides* sp.	1.8
	Unidentified		15.5
17	Ariommatidae	*Ariomma regulus**	0.4
	Blenniidae	Unidentified	0.4
	Bothidae	*Bothus* sp.	1.0
		Citharichthys sp.	0.4
		Etropus sp.	1.0
	Bregmacerotidae	*Bregmaceros* sp.*	0.4
	Carangidae	Unidentified	3.0
	Clupeidae	*Brevoortia tyrannus*	6.9
		Etrumeus teres	20.6
	Engraulidae	*Engraulis eurystole*	0.4
	Gobiidae	Unidentified	1.0
	Gonostomatidae	*Cyclothone* sp.*	0.8

Appendix Table 5 (Continued)

Station	Family	Taxon	Relative abundance (No./100 m^3)
	Kyphosidae	*Kyphosus sectatrix*	1.0
	Lophiidae	*Lophius americanus*	1.0
	Myctophidae	Unidentified*	8.6
	Nomeidae	*Psenes pellucidus**	0.4
	Sciaenidae	*Leiostomus xanthurus*	2.0
	Scorpaenidae	*Helicolenus dactylopterus*	1.1
	Serranidae	*Centropristis* sp.	0.4
	Synodontidae	*Trachinocephalus myops*	1.0
		Unidentified	1.4
	Triglidae	Unidentified	2.0
	Unidentified		26.5
18	Bothidae	*Bothus* sp.	1.1
		Etropus microstomus	1.1
		Unidentified	0.4
	Bregmacerotidae	*Bregmaceros* sp.*	0.8
	Carangidae	*Decapterus* sp.	1.1
	Clupeidae	*Brevoortia tyrannus*	2.8
		Etrumeus teres	10.2
	Gempylidae	*Diplospinus multistriatus**	0.4
	Gobiidae	Unidentified	1.1
	Myctophidae	*Diogenichthys atlanticus**	0.4
	Ophidiidae	Unidentified	1.1
	Photichthyidae	*Vinciguerria* sp.*	0.4
	Scaridae	Unidentified	1.1
	Scombridae	*Scomber japonicus*	2.1
	Scorpaenidae	Unidentified	0.4
	Serranidae	*Anthias* sp.	0.4
		Diplectrum sp.	0.7
	Stromateidae	*Peprilus triacanthus*	1.1
	Synodontidae	Unidentified	0.8
	Unidentified		18.9